U´chine Technology 20 year

Of Experience in
Design and Manufacturing of
CNC Horizontal Boring
& Milling Machine



Conventional Horizontal Boring & Milling Machine
UBM series

CNC Horizontal Boring & Milling Machine (FIXED COLUMN)
UBM-RS series

CNC Horizontal Machining Center
UHM series

CNC Horizontal Heavy Duty Milling Machine
UMM series

CNC Horizontal Boring & Milling Machine (MOVABLE COLUMN)
UBM-R series

U´Chine U´chine Technology Co., LTD.

Office / No.63, Ln. 136, Sec. 1. Jiahou Rd., Houli Dist., Taichung City 421, Taiwan
TEL : 886-4-25583808 FAX : 886-4-25583908
Service / TEL : 886-4-25229389 FAX : 886-4-25228810
E-mail : sales@uchine.com.tw
http://www.uchine.com.tw

1000 2018 08 Design by REFINER DESIGN CO.,LTD.



UDM series

CNC Double Column Machining Center

UDM series

MODEL IDENTIFICATION
UDM-XXXX
U'Chine Double Column Machining Center
X-axis Travel (x100mm)
Y-axis Travel (x100mm)

UDM SERIES (Small Model)

CNC DOUBLE COLUMN MACHINING CENTER

- **Range of X-axis travel: 2200~3200mm.**
- **Two linear guide ways on base (X-axis).**
- **Two linear guide ways on Y-axis with two blocks on each linear guide way.**
- **Box ways on Z-axis.**
- **Both columns and the cross beam cast in one single piece.**
- **BT50, 6000rpm gear-drive spindle.**





One piece structure (cross beam & column)



Full casting structure

MACHINE SPECIFICATIONS

UDM-XXXX (A B)
A (x100mm) : X-Axis Travel
B (x100mm) : Y-Axis Travel
( ): As Optional

	MODLE	UNIT	UDM-2212	UDM-2215	UDM-3212	UDM-3215
TABLE	Table Size	mm	2000 x 1100	2000 x 1300	3000 x 1100	3000 x 1300
	T-slots Size	mm	22			
	Maximum Load	kg	3500	4000	4500	5000
TRAVEL	X-Axis	mm	2200	2200	3200	3200
	Y-Axis	mm	1200	1500	1200	1500
	Z-Axis	mm	760			
SPINDLE	Spindle Servo Motor - cont. / 30min.	kW	11/15 (22/26)			
	Speed	rpm	6000			
	Taper		7/24 Taper, ISO.50, BT-50			
DISTANCES	Between Two Columns	mm	1300	1500	1300	1500
	Spindle Nose to Table Surface	mm	200 ~ 960			
FEED RATE	Rapid Feed Rate X / Y / Z	m/min	20 / 20 / 15			
	Minimum Setting	mm/min	0.001			
	Cutting Feed Rate	m/min	8			
ATC	No. of Tools	pieces	0 (24 / 32 / 40)			
	Tool Change Time - T to T (apporox.)	sec	8 (Arm Type)			
	Max. Tool-Diameter / Length	mm	Ø125/Ø200 (Without Adjacent Tool) / Length 350			
	Max. Tool Weight	kg	15			
COOLANT & LUBRICATION	Coolant Tank Volume	L	240			
	Hydraulic Tank Volume	L	70			
	Lubrication Tank Volume	L	8			
MISCELLANEOUS	Power Required	kVA	40			
	Pressurized Air	kg/cm²	5 ~ 8			
	Hydraulics Required	kg/cm²	70			
	Machine Weight (apporox.)	kg	17000	17500	21000	21500
	Controller		FANUC 0i MF (FANUC 32i-B/31i-B) (MITSUBISHI, SIEMENS, HEIDENHAIN)			

■ Specifications are subject to change without prior notice.

STANDARD ACCESSORIES :

1. Glass window type splash guard
2. Programmable coolant system
3. Automatic lubrication system
4. Spindle air blast system
5. Working lamp
6. Alarm lamp for abnormal situations
7. Indication lamp for dwell & end of job
8. Leveling bolts & pads
9. Chip auger & chain type chip conveyors
10. Toolbox with spanners & wrenches
11. M.P.G
12. Machine inspection lists
13. Operation manuals
14. Controller manuals and circuit diagram
15. Auto power off
16. RS-232C terminal interface
17. Spindle coolant system
18. Hydraulic system
19. Heat exchanger
20. FANUC 0i MF Controller

OPTIONAL ACCESSORIES :

1. 8000RPM direct drive spindle (35HP)
2. X, Y and Z axes with linear scales
3. Auto. tool length & diameter measurement (TS-27R)
4. CNC rotary table
5. ATC: 24, 32, 40 tools
6. Coolant through spindle
7. Oil-feed holder
8. Oil mist device
9. Air conditioner for electrical cabinet
10. FANUC 32i-B (31i-B) Controller
11. MITSUBISHI Controller
12. SIEMENS Controller
13. HEIDENHAIN Controller
14. 12000RPM or 15000RPM direct drive spindle-BBT 40 (only for FANUC or MITSUBISHI controller)

UDM series

MODEL IDENTIFICATION

UDM-XXXXE

U´Chine Double Column Machining Center

X-axis Travel (x100mm)

Y-axis Travel (x100mm)

E Type

UDM SERIES (E Type)

CNC DOUBLE COLUMN MACHINING CENTER

- **Range of X-axis travel: 2200~6200mm {door widths 1900 (2000), 2400 (2500), 2800mm}.**
- **Two linear guide ways on base (X-axis) (M55 roller type).**
- **Two linear guide ways on Y-axis (M65 roller type. Two blocks on each linear guide way).**
- **Box ways on Z-axis (Linear guide ways on Z-axis are optional. M65 roller type. Two blocks on each linear guide way).**
- **Step type beam construction (bridge type).**
- **Contact face length between the saddle and spindle head is 970mm.**
- **BT50, 4000rpm (6000, 8000rpm) gear-drive spindle.**



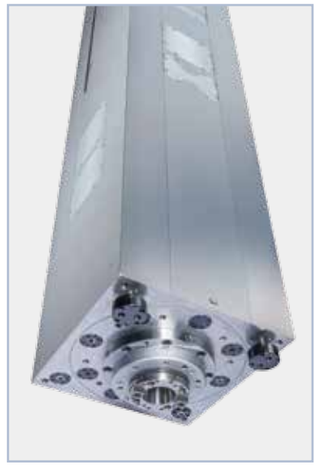

Available to equip with a highly rigid square ram type spindle head on Z-axis (optional).



Available to mount with linear guideways on Z-axis and use direct-drive high speed spindle (8,000~15,000 rpm) (optional).

UDM SERIES

CNC Double Column Machining Cetnter *(E Type)*

MACHINE SPECIFICATIONS

UDM-**XXXX** (A B)
A (x100mm) : X-Axis Travel
B (x100mm) : Y-Axis Travel

[ ]: As Optional

	MODLE	UNIT	UDM-**2218E**	UDM-**2718E**	UDM-**3218E**	UDM-**3718E**	UDM-**4218E**	UDM-**2223E**	UDM-**2723E**	UDM-**3223E**	UDM-**3723E**	UDM-**4223E**	UDM-**5223E**	UDM-**6223E**	UDM-**3228E**	UDM-**3728E**	UDM-**4228E**	UDM-**5228E**	UDM-**6228E**
TABLE	Table Size	mm	2000x1500	2500x1500	3000x1500	3500x1500	4000x1500	2000x2100	2500x2100	3000x2100	3500x2100	4000x2100	5000x2100	6000x2100	3000x2100	3500x2100	4000x2100	5000x2100	6000x2100
	T-slots Size	mm	22							22									
	Maximum Load	tons	8	9	10	11	12	10	11	12	12	13	14	15	12	12	13	14	15
TRAVEL	X-Axis	mm	2200	2700	3200	3700	4200	2200	2700	3200	3700	4200	5200	6200	3200	3700	4200	5200	6200
	Y-Axis	mm	1800					2300 (2800)		2300 (2800)					2800 (3200)				
	Z-Axis	mm	1000							1000									
SPINDLE	Spindle Servo Motor - cont. / 30min.	kW	15/18.5 (22/26)							15/18.5 (22/26)									
	Speed	rpm	6000 (4000)							6000 (4000)									
	Taper		7/24 Taper ISO.50, BT-50							7/24 Taper ISO.50, BT-50									
DISTANCES	Between Two Columns	mm	1900 (2000)					2400 (2500)		2400 (2500)					2800				
	Spindle Nose to Table Surface	mm	200~1200							200~1200									
FEED RATE	Rapid Feed Rate X / Y / Z	m/min	15 / 15 / 12 (24 / 24 / 20 Z-Axis Linear Guide Way)									15 / 15 / 12	12 / 15 / 12		15 / 15 / 12			12 / 15 / 12	
	Minimum Setting	mm/min	0.001							0.001									
	Cutting Feed Rate	mm/min	1~8000							1~8000									
ATC	No. of Tools	pieces	0 (24 / 32 / 40)							0 (24 / 32 / 40)									
	Tool Change Time - T to T (apporox.)	sec	8 (Arm Type)							8 (Arm Type)									
	Max. Tool-Diameter / Length	mm	Ø125/Ø200 (Without Adjacent Tool) / Length 350							Ø125/Ø200 (Without Adjacent Tool) / Length 350									
	Max. Tool Weight	kg	15							15									
COOLANT & LUBRICATION	Coolant Tank Volume	L	450					640		640									
	Hydraulic Tank Volume	L	70							70									
	Lubrication Tank Volume	L	8							8									
MISCELLANEOUS	Power Required	kVA	50							50			55						
	Pressurized Air	kg/cm²	7							7									
	Hydraulics Required	kg/cm²	70							70									
	Machine Weight (apporox.)	tons	24	27	30	32	34	27	29	31	33	35	39	43	33	35	39	43	50
	Controller		FANUC 0iMF (32i-MB/31i-MB) (MITSUBISHI) (SIEMENS) (HEIDENHAIN)							FANUC 0iMF (32i-MB/31i-MB) (MITSUBISHI) (SIEMENS) (HEIDENHAIN)									

- Specifications are subject to change without prior notice.
- Thare are new types UDM-3718E, 3723E, 3728E.

STANDARD ACCESSORIES :

1. Glass window type splash guard
2. Programmable coolant system
3. Automatic lubrication system
4. Spindle air blast system
5. Work lamp
6. Alarm lamp for abnormal situations
7. Indication lamp for dwell & end of job
8. Leveling bolts & pads
9. Chip auger & chain type chip conveyor
10. Toolbox with spanners & wrenches
11. M.P.G
12. Machine inspection lists
13. Operation manuals
14. Controller manuals and circuit diagram
15. Auto power off
16. RS-232C terminal interface
17. Spindle coolant system
18. Hydraulic system
19. Heat exchanger
20. FANUC 0i MF Controller

OPTIONAL ACCESSORIES :

1. 8000RPM direct drive spindle (35HP)
2. X, Y and Z axes with linear scales
3. Auto. tool length & diameter measurement (TS-27R)
4. CNC rotary table
5. ATC: 24, 32, 40 tools
6. Coolant through spindle
7. Oil-feed holder
8. Oil mist device
9. Air conditioner for electrical cabinet
10. FANUC 32i-B (31i-B) Controller
11. MITSUBISHI Controller
12. SIEMENS Controller
13. HEIDENHAIN Controller
14. 12000RPM or 15000RPM direct drive spindle-BBT 40 (only for FANUC or MITSUBISHI controller)



UDM series

MODEL IDENTIFICATION

UDM-XXXX

U´Chine
Double Column Machining Center
X-axis Travel (x100mm)
Y-axis Travel (x100mm)

UDM SERIES

(Two Linear Guide Ways on X-axis)

CNC DOUBLE COLUMN MACHINING CENTER

- Range of X-axis travel: 2200~6200mm.
- Two linear guide ways on base (X-axis).
- Two linear guide ways on Y-axis with three blocks on each linear guide way.
- Box ways on Z-axis.
- Step type beam construction.
- BT50, 4000rpm gear-drive spindle.

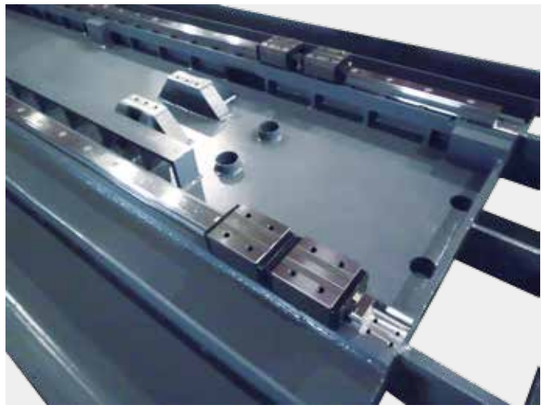

Two Linear Guide Ways on X-axis



UDM SERIES

CNC Double Column Machining Cetnter *(Two Linear Guide Ways)*

MACHINE SPECIFICATIONS

UDM-**XXXX** (A B)
A (x100mm) : X-Axis Travel
B (x100mm) : Y-Axis Travel

( ): As Optional

MODLE		UNIT	UDM-**2216**	UDM-**2616**	UDM-**3216**	UDM-**4216**	UDM-**2221**	UDM-**2621**	UDM-**3221**	UDM-**4221**	UDM-**5221**	UDM-**3226**	UDM-**3228**	UDM-**4226**	UDM-**4228**	UDM-**5226**	UDM-**5228**	UDM-**6221**	UDM-**6226**	UDM-**6228**
TABLE	Table Size	mm	2000x1400	2400x1400	3000x1400	4000x1400	2000x1800	2400x1800	3000x1800	4000x1800	5000x1800	3000x2200	3000x2500	4000x2200	4000x2500	5000x2200	5000x2500	6000x1800	6000x2000	6000x2500
	T-slots Size	mm	22							22										
	Maximum Load	tons	6	8	9	10	8	9	10	12	15	12		14		18	18	20	22	22
TRAVEL	X-Axis	mm	2200	2600	3200	4200	2200	2600	3200	4200	5200	3200		4200		5200	5200	6200	6200	6200
	Y-Axis	mm	1600				2100			2100		2600	3200	2600	3200	2600	3200	2100	2600	3200
	Z-Axis	mm	800 (1000, 1200)							800 (1000, 1200)										
SPINDLE	Spindle Servo Motor - cont. / 30min.	kW	15/18.5 (22/26)							15/18.5 (22/26)										
	Speed	rpm	4000 (6000)							4000 (6000)										
	Taper		7/24 Taper ISO.50, BT-50							7/24 Taper ISO.50, BT-50										
DISTANCES	Between Two Columns	mm	1600				2100			2100		2600	2800	2600	2800	2600	2800	2100	2600	2800
	Spindle Nose to Table Surface	mm	200~1000 (200~1200, 200~1400)							200~1000 (200~1200, 200~1400)										
FEED RATE	Rapid Feed Rate X / Y / Z	m/min	12 / 12 / 10							12 / 12 / 10						10 / 12 / 10				
	Minimum Setting	mm/min	0.001							0.001										
	Cutting Feed Rate	mm/min	1~5000							1~5000										
ATC	No. of Tools	pieces	(24 / 32 / 40 / 60)							(24 / 32 / 40 / 60)										
	Tool Change Time - T to T (apporox.)	sec	8 (Arm Type)							8 (Arm Type)										
	Max. Tool-Diameter / Length	mm	Ø125/Ø200 (Without Adjacent Tool) / Length 350							Ø125/Ø200 (Without Adjacent Tool) / Length 350										
	Max. Tool Weight	kg	18							18										
COOLANT & LUBRICATION	Coolant Tank Volume	L	450				640	450	640	640			700	680	700	750	700	750		700
	Hydraulic Tank Volume	L	70				80	70	80	80										
	Lubrication Tank Volume	L	8							8										
MISCELLANEOUS	Power Required	kVA	50							50										
	Pressurized Air	kg/cm²	7							7										
	Hydraulics Required	kg/cm²	70							70										
	Machine Weight (apporox.)	tons	26	28	30	33	27	25	31	35	38.5	38.5	43	43	48	49	54	44	50	60
	Controller		FANUC 0iMF (32i-B/31i-B) (MITSUBISHI) (SIEMENS) (HEIDENHAIN)							FANUC 0iMF (32i-B/31i-B) (MITSUBISHI) (SIEMENS) (HEIDENHAIN)										

■ Specifications are subject to change without prior notice.

STANDARD ACCESSORIES :

1. Glass window type splash guard
2. Programmable coolant system
3. Automatic lubrication system
4. Spindle air blast system
5. Work lamp
6. Alarm lamp for abnormal situations
7. Indication lamp for dwell & end of job
8. Leveling bolts & pads
9. Chip auger & chain type chip conveyor
10. Toolbox with spanners & wrenches
11. M.P.G
12. Machine inspection lists
13. Operation manuals
14. Controller manuals and circuit diagram
15. Auto power off
16. RS-232C terminal interface
17. Spindle coolant system
18. Hydraulic system
19. Heat exchanger
20. FANUC 0i MF Controller

OPTIONAL ACCESSORIES :

1. Auxiliary work table
2. CNC rotary table
3. ATC: 24, 32, 40, 60 tools
4. Auto. tool length & diameter measurement (TS-27R)
5. Work piece coordinate measuring (OMP 60)
6. Various milling heads are available
7. Linear scales
8. Coolant through spindle
9. Oil-feed holder
10. Oil mist device
11. Programmable coolant nozzle
12. Air conditioner for electrical cabinet
13. Auto heat compensation
14. Z-axis linear guide ways and direct-drive high speed spindle (800rpm) (or BBT-40, 12000rpm , 15000rpm)
15. Square ram on Z-axis



UDM series

MODEL IDENTIFICATION

UDM-XXXX

U´Chine
Double Column Machining Center
X-axis Travel (x100mm)
Door Width (x100mm)

UDM SERIES

(Three Linear Guide Ways on X-axis)

CNC DOUBLE COLUMN MACHINING CENTER

- Range of X-axis travel: 4200~8200mm.
- Three linear guide ways on base (X-axis).
- Two linear guide ways on Y-axis with three blocks on each linear guide way.
- Box ways on Z-axis.
- Step type beam construction.
- BT50, 4000rpm gear-drive spindle.



Three Linear Guide Ways on X-axis



UDM SERIES

CNC Double Column Machining Cetnter *(Three Linear Guide Ways)*

MACHINE SPECIFICATIONS

UDM-XXXX (A B)
A (x100mm) : X-Axis Travel
B (x100mm) : Door Width

( ): As Optional

	MODLE	UNIT	UDM-4228B	UDM-5228B	UDM-6228B	UDM-4232	UDM-5232	UDM-6232	UDM-7232	UDM-4236	UDM-5236	UDM-6236	UDM-7236	UDM-7232B	UDM-7236B	UDM-8232B	UDM-8236B
TABLE	Table Size	mm	4000x2500	5000x2500	6000x2500	4000x2900	5000x2900	6000x2900	6000x2900	4000x3000	5000x3000	6000x3000	6000x3000	7000x2900	7000x3000	8000x2900	8000x3000
	T-slots Size	mm	22						22								
	Maximum Load	tons	16	20	24	16	20	24	24	16	20	24	24	24			
TRAVEL	X-Axis	mm	4200	5200	6200	4200	5200	6200	7200	4200	5200	6200	7200	7200	7200	8200	8200
	Y-Axis	mm	3200			3600			3600	4000				3600	4000	3600	4000
	Z-Axis	mm	1000 (1200, 1400 Square Ram)						1000 (1200, 1400 Square Ram)								
SPINDLE	Spindle Servo Motor - cont. / 30min.	kW	15/18.5 (22/26)						15/18.5 (22/26)								
	Speed	rpm	4000 (6000)						4000 (6000)								
	Taper		7/24 Taper ISO.50, BT-50						7/24 Taper ISO.50, BT-50								
DISTANCES	Between Two Columns	mm	2800			3200			3200	3600				3200	3600	3200	3600
	Spindle Nose to Table Surface	mm	200~1200 (200~1400, 200~1600)						200~1200 (200~1400, 200~1600)								
FEED RATE	Rapid Feed Rate X / Y / Z	m/min	10 / 12 / 10						10 / 12 / 10								
	Minimum Setting	mm/min	0.001						0.001								
	Cutting Feed Rate	mm/min	1~5000						1~5000								
ATC	No. of Tools	pieces	(24 / 32 / 40 / 60)						(24 / 32 / 40 / 60)								
	Tool Change Time - T to T (apporox.)	sec	8 (Arm Type)						8 (Arm Type)								
	Max. Tool-Diameter / Length	mm	Ø125/Ø200 (Without Adjacent Tool) / Length 350						Ø125/Ø200 (Without Adjacent Tool) / Length 350								
	Max. Tool Weight	kg	18						18								
COOLANT & LUBRICATION	Coolant Tank Volume	L	700						700	750				700	750	700	750
	Hydraulic Tank Volume	L	80						80								
	Lubrication Tank Volume	L	8						8								
MISCELLANEOUS	Power Required	kVA	50						50								
	Pressurized Air	kg/cm²	7						7								
	Hydraulics Required	kg/cm²	70						70								
	Machine Weight (apporox.)	tons	48	54	60	55	62	68	75	58	64	72	82	75	80	80	85
	Controller		FANUC 0iMF (32i-B/31i-B) (MITSUBISHI) (SIEMENS) (HEIDENHAIN)						FANUC 0iMF (32i-B/31i-B) (MITSUBISHI) (SIEMENS) (HEIDENHAIN)								

■ Specifications are subject to change without prior notice.

STANDARD ACCESSORIES :

1. Glass window type splash guard
2. Programmable coolant system
3. Automatic lubrication system
4. Spindle air blast system
5. Work lamp
6. Alarm lamp for abnormal situations
7. Indication lamp for dwell & end of job
8. Leveling bolts & pads
9. Chip auger & chain type chip conveyor
10. Toolbox with spanners & wrenches
11. M.P.G
12. Machine inspection lists
13. Operation manuals
14. Controller manuals and circuit diagram
15. Auto power off
16. RS-232C terminal interface
17. Spindle coolant system
18. Hydraulic system
19. Heat exchanger
20. FANUC 0i MF Controller

OPTIONAL ACCESSORIES :

1. Auxiliary work table
2. CNC rotary table
3. ATC: 24, 32, 40, 60 tools
4. Auto. tool length & diameter measurement (TS-27R)
5. Work piece coordinate measuring (OMP 60)
6. Various milling heads are available
7. Linear scales
8. Coolant through spindle
9. Oil-feed holder
10. Oil mist device
11. Programmable coolant nozzle
12. Air conditioner for electrical cabinet
13. Auto heat compensation
14. Z-axis linear guide ways and direct-drive high speed spindle (800rpm) (or BBT-40, 12000rpm, 15000rpm)
15. Square ram on Z-axis



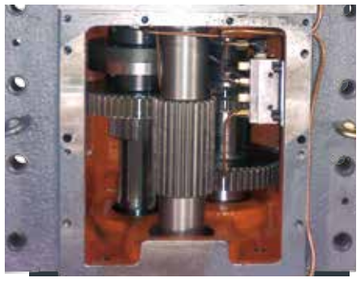

Gearbox Type Spindle Head

The Ø100mm spindle is driven by a α 22 spindle motor and transmitted through a gearbox, providing maximum speed 6000rpm and 755N-m of torque output. This makes the machine ideal for both high speed and heavy cutting applications. When a 4000rpm is used, torque output may reach 1132N-m for extra powerful cutting operation.

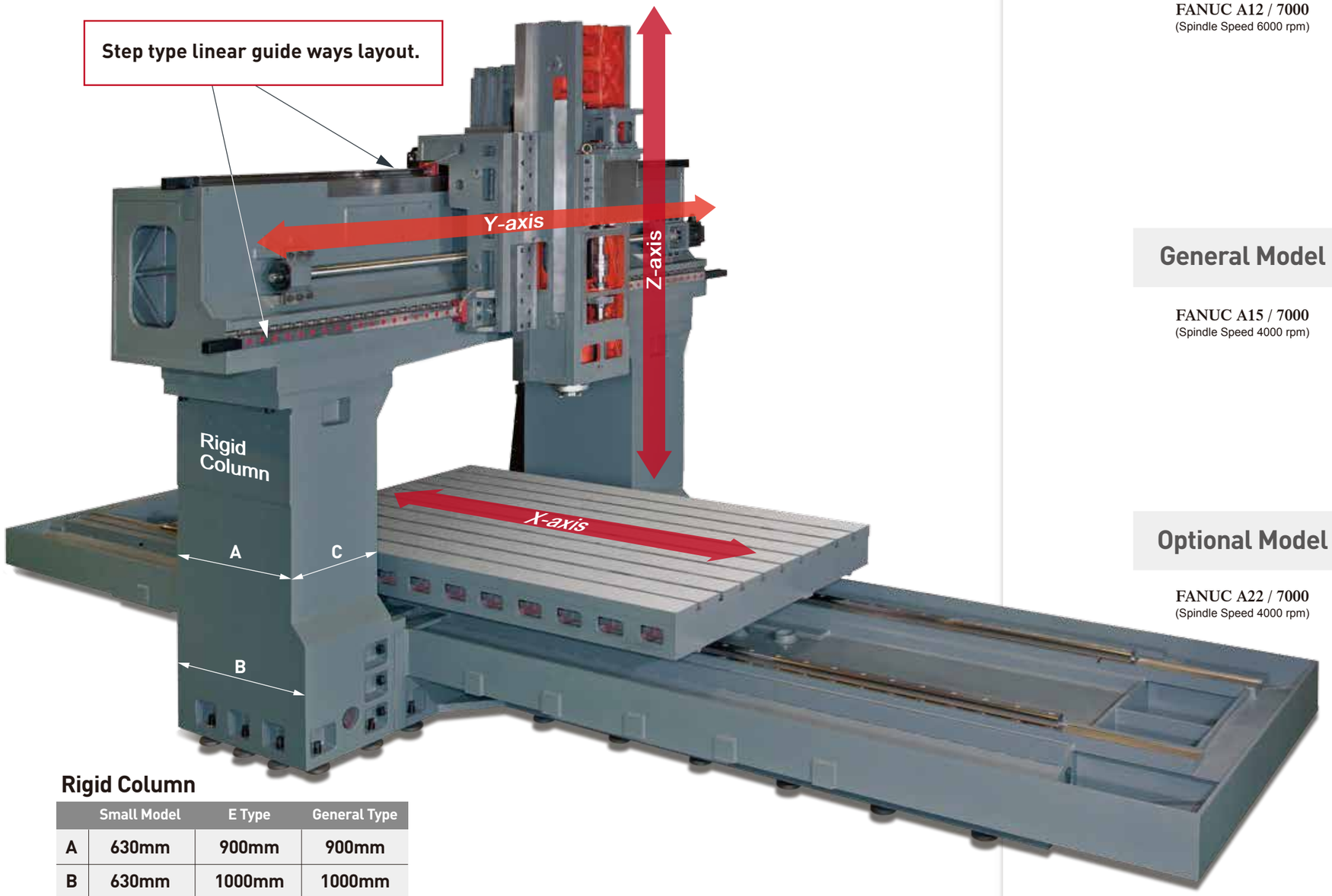

Rigid Column

	Small Model	E Type	General Type
A	630mm	900mm	900mm
B	630mm	1000mm	1000mm
C	350mm	480mm	550mm

Spindle Speed / Torque Diagram

UDM series

Small Model

FANUC A12 / 7000
(Spindle Speed 6000 rpm)

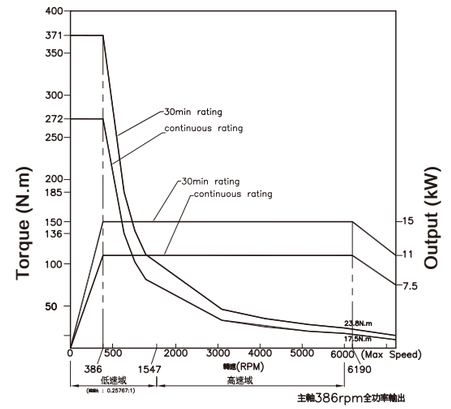

General Model

FANUC A15 / 7000
(Spindle Speed 4000 rpm)

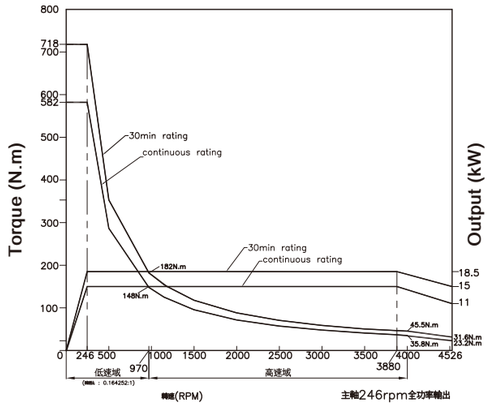

Optional Model

FANUC A22 / 7000
(Spindle Speed 4000 rpm)

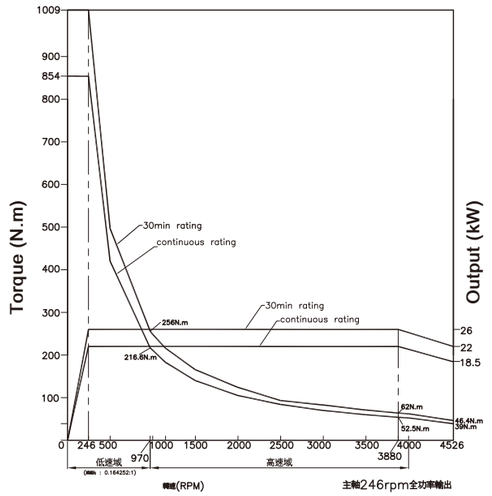

Step Type Beam for Improved Cutting Stability

The oversized beam is a step type construction, that allows for better stability of cutting.



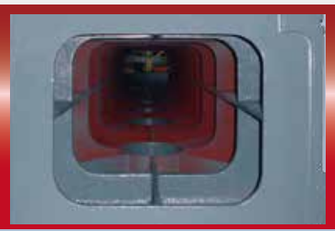



Scientifically Rib Reinforced Beam

The oversized beam in combination with scientific rib reinforcement in the beam interior helps to maximize structural rigidity, and provide a solid support for the spindle head.

65mm Roller Type Linear Guide Ways on Column (Y-axis)

The Y-axis is mounted with 65mm roller type linear guide ways. Each linear guide way (upper and lower) is equipped with three blocks respectively for increased rigidity of the spindle head.

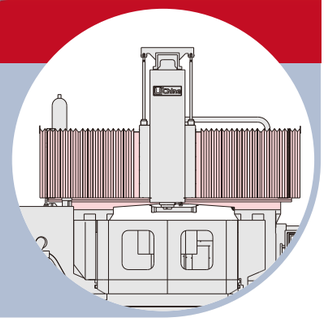

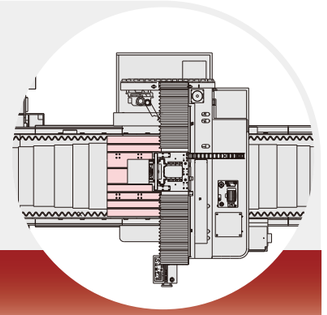

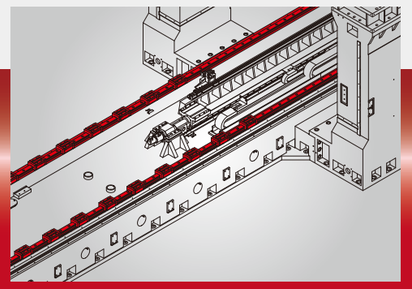

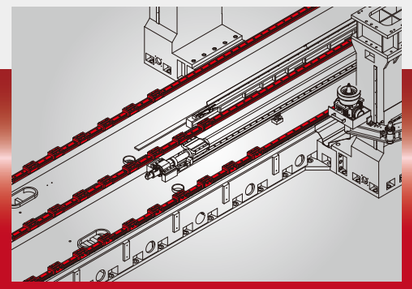

Two Linear Guide Ways on The Base (X-axis)

- Depending on table width, the machine base will be mounted with two or three linear guide ways.
- The X-axis is mounted with 65mm ball type linear guide ways, featuring low friction and making it ideal for heavy workpiece machining.

Three Linear Guide Ways on The Base (X-axis)



Hydraulic Counter-balance on Z-axis

The Z-axis movement is counter-balanced by two hydraulic cylinders, ensuring outstanding smoothness and stability of Z-axis movement.



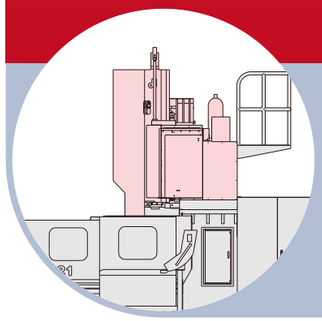

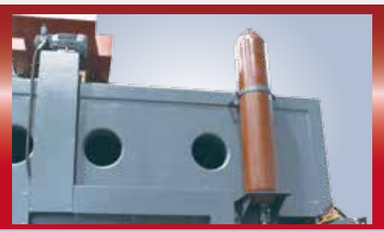



Accumulator

The accumulator is used to supply pressure source to the hydraulic cylinders, allowing the Z-axis to move smoothly.

Directly Coupled To Ball Screw

The servo motor on the Y-axis is directly coupled to the ball screw with a coupling, that eliminates backlash while achieving high transmission accuracy.

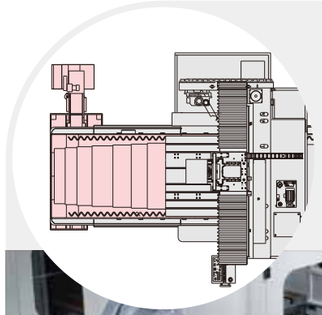



Chip Conveyor

The front mounted link chain type chip conveyor collects the chips from the chip augers for delivering chips out of the machine.

Big Capacity

- The coolant tank can be moved out for convenient cleaning.
- Upon request, an oil coolant separation device is available to prevent cutting fluid from deterioration. (Optional)



Two Chip Augers on Base

The right and left side of base are equipped with two chip augers for delivering chips to the front mounted link chain type chip conveyor. These chip augers enable the machine to keep clean during cutting.

Optional Accessories





Disk Type Magazine

- Load capacity is 24 tools.

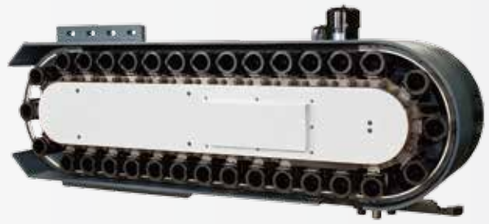

Side-mount Chain Type Magazine

- A choice of 32, 40 or 60 tools is available.

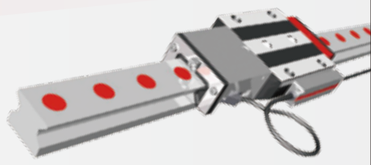

Schneeberger Linear Scales

For models with table length 5,000mm and over, X-axis is available to equip with a Schneeberger linear scale.



HEIDENHAIN Linear Scales

Linear scales for high positioning accuracy are available for the X, Y and Z-axis.

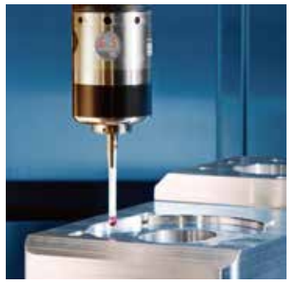

Work Piece Coordinate Measuring



Auto. Tool Length & Diameter Measurement



Thermal growth compensation device for spindle

Various kinds of controllers to choose from.



STANDARD:

FANUC 0iMF

OPTIONAL:

FANUC 32i-MB/31i-MB

SIEMENS

HEIDENHAIN

MITSUBISHI



Fully automatic change universal milling head



Fully automatic change 90° side milling head



Fixed type fully automatic universal milling head



Semi-automatic milling head



Manual right angle milling head



Manual 45° universal milling head



Manual 90° universal milling head

Machine Dimensions

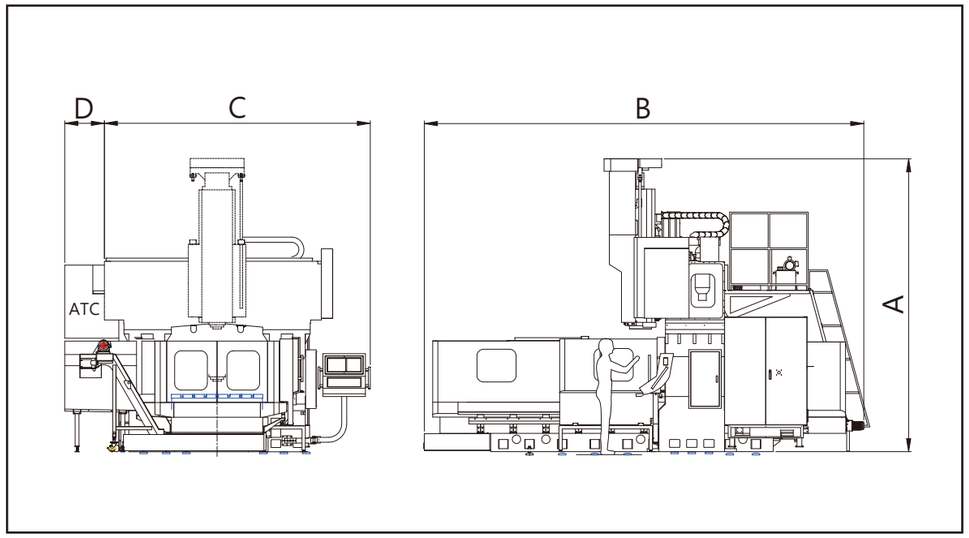

	MODLE	A	B	C	D
Small Model	UDM-**2212**	3710	5850	3110	760 ~ 1050
	UDM-**2215**		5850	3310	
	UDM-**3212**		7850	3110	
	UDM-**3215**		7850	3310	
E Type	UDM-**2217E**	4100	5510	4420	760 ~ 1050
	UDM-**2717E**		6510	4420	
	UDM-**3217E**		7510	4420	
	UDM-**2223E**		5510	4880	
	UDM-**2723E**		6510	4880	
	UDM-**3223E**		7510	4880	
	UDM-**4223E**		9710	4880	
	UDM-**3228E**		7510	5280	
	UDM-**4228E**		9710	5280	
	UDM-**5223E**		11710	4880	
	UDM-**6223E**		13910	4880	
	UDM-**5228E**		11710	5280	
	UDM-**6228E**		13910	5280	

■ Specifications are subject to change without prior notice.

	MODLE	A	B	C	D
2 linear guide ways(X-axis)	UDM-**2216**	Z-800, 3900 Z-1000, 4300 Z-1200, 4700	6280	4150	760 ~ 1050
	UDM-**2616**		7080	4150	
	UDM-**3216**		8280	4150	
	UDM-**4216**		10280	5270	
	UDM-**2221**		6280	4650	
	UDM-**2621**				
	UDM-**3221**		8280	4650	
	UDM-**4221**		10280	5730	
	UDM-**5221**		13200	6550	
	UDM-**3226**		8280	4150	
	UDM-**3228**		8280	4650	
	UDM-**4226**		10280	4150	
	UDM-**4228**		10280	4650	
	UDM-**5226**		13200	4650	
	UDM-**5228**		13200	5270	
	UDM-**6221**		15100	4650	
	UDM-**6226**		15100	5270	
	UDM-**6228**		15100	5730	
3 linear guide ways(X-axis)	UDM-**4228B**	Z-800, 3900 Z-1000, 4300 Z-1200, 4700	10280	5730	760 ~ 1050
	UDM-**5228B**		13200	5730	
	UDM-**6228B**		15100	5730	
	UDM-**4232**		10280	5730	
	UDM-**5232**		13200	6130	
	UDM-**6232**		15100	6130	
	UDM-**7232**		16100	6130	
	UDM-**4236**		13200	6130	
	UDM-**5236**		13200	6550	
	UDM-**6236**		15100	6550	
	UDM-**7236**		16100	6550	
	UDM-**7232B**		17100	6130	
	UDM-**7236B**		17100	6550	
	UDM-**8232B**		19100	6130	
	UDM-**8236B**		19100	6550	

■ Specifications are subject to change without prior notice.